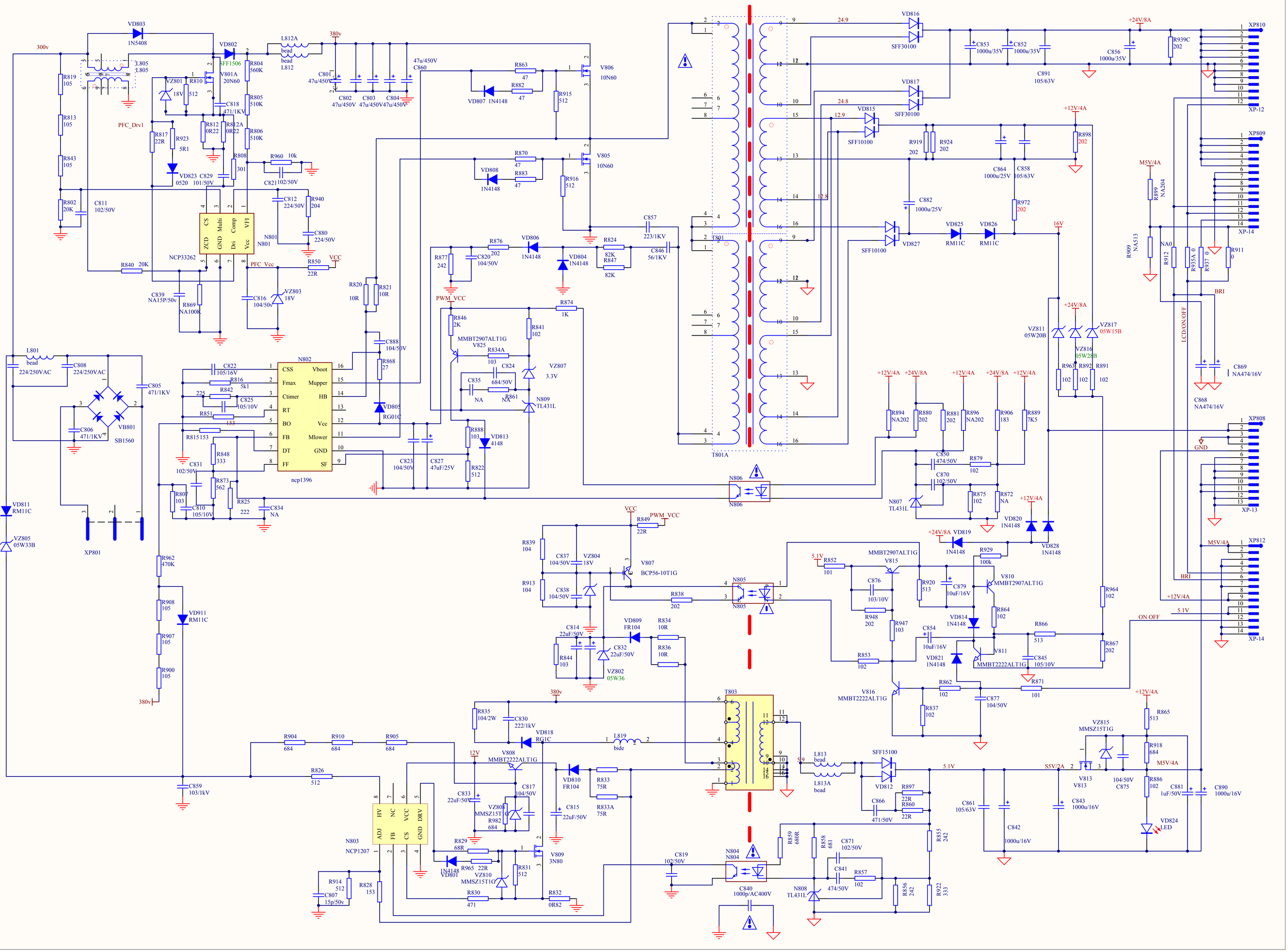
300v
VD803
1N5408
VD802
SFF1506
L812A
bead
L812
380v
V801A
20N60
R804
560K
R805
510K
R806
510K
R808
301
R810
512
VZ801
18V
C818
471/1KV
R812
0R22
R812A
0R22
R819
105
R813
105
R843
105
R802
20K
L805
PFC_Drv1
R817
22R
R923
5R1
VD823
0520
C829
101/50V
C811
102/50V
R960
10k
C821
102/50V
C812
224/50V
R940
204
C880
224/50V
N801
NCP33262
CS
Multi
Comp
VFH
ZCD
GND
Dri
Vcc
R840
20K
PFC_Vcc
R850
22R
VCC
C839
NA15P/50v
R869
NA100R
C816
104/50v
VZ803
18V
C801
47u/450V
C802
47u/450V
C803
47u/450V
C804
47u/450V
47u/450V
C860
R863
47
R882
47
VD807
1N4148
V806
10N60
R915
512
R870
47
R883
47
VD808
1N4148
V805
10N60
R916
512
C857
223/1KV
C846
56/1KV
R824
82K
R847
82K
VD804
1N4148
R876
202
VD806
1N4148
R877
242
C820
104/50V
PWM_VCC
R820
10R
R821
10R
C888
104/50V
R868
27
VD805
RG01C
R874
1K
R846
2K
MMBT2907ALT1G
V825
R834A
103
C824
684/50V
C835
NA
R861
NA
R841
102
VZ807
3.3V
N809
TL431L
R888
103
VD813
4148
R822
512
C823
104/50V
C827
47uF/25V
L801
bead
C808
224/250VAC
224/250VAC
C805
471/1KV
C806
471/1KV
VB801
SB1560
C822
105/16V
R816
5k1
R842
225
C825
105/10V
R851
153
R815
153
R848
333
C831
102/50V
R873
562
R807
103
C810
105/10V
R825
222
C834
NA
N802
CSS
Fmax
Ctimer
RT
BO
FB
DT
FF
Vboot
Mupper
HB
Vcc
Mlower
GND
SF
ncp1396
VD811
RM11C
VZ805
05W33B
XP801
R962
470K
R908
105
VD911
RM11C
R907
105
R900
105
380v
R904
684
R910
684
R905
684
R826
512
C859
103/1kV
N803
NCP1207
HV
NC
VCC
DRV
ADJ
FB
CS
GND
R914
512
C807
15p/50v
R828
153
R829
68R
1N4148
VD801
R965
22R
VZ810
MMSZ15T1G
R831
512
R830
471
R832
0R82
V809
3N80
R839
104
R913
104
C837
104/50V
C838
104/50V
VZ804
18V
V807
BCP56-10T1G
R849
22R
PWM_VCC
C814
22uF/50V
R844
103
C832
22uF/50V
VZ802
05W36
VD809
FR104
R834
10R
R836
10R
R838
202
N805
T803
R835
104/2W
C830
222/1kV
VD818
RG1C
L819
bide
12V
V808
MMBT2222ALT1G
C833
22uF/50V
C817
104/50V
VZ808
MMSZ15T1G
R982
684
VD810
FR104
R833
75R
R833A
75R
C815
22uF/50V
C819
102/50V
N804
C840
1000p/AC400V
R859
680R
R858
681
C871
102/50V
C841
474/50V
R857
102
N808
TL431L
R855
242
R856
242
R922
333
L813
bead
L813A
bead
SFF15100
VD812
R897
22R
R860
22R
C866
471/50V
5.1V
C861
105/63V
C842
1000u/16V
S5V/2A
V813
104/50V
C875
C843
1000u/16V
R865
513
VZ815
MMSZ15T1G
R918
684
M5V/4A
R886
102
C881
1uF/50V
C890
1000u/16V
VD824
LED
T801
T801A
24.9
24.8
12.9
12.8
VD816
SFF30100
VD817
SFF30100
VD815
SFF10100
SFF10100
VD827
C853
1000u/35V
C852
1000u/35V
C891
105/63V
C856
1000u/35V
+24V/8A
R939C
202
XP810
XP-12
+12V/4A
R898
202
R919
202
R924
202
C864
1000u/25V
C858
105/63V
C882
1000u/25V
R972
202
VD825
RM11C
VD826
RM11C
16V
VZ811
05W20B
VZ816
05W28B
VZ817
05W15B
R963
102
R892
102
R891
102
XP809
XP-14
M5V/4A
R899
NA204
R909
NA513
NA0
R912
R935A 0
R937 0
R911
0
BRI
LCD/ON/OFF
C869
NA474/16V
C868
NA474/16V
XP808
XP-13
GND
+12V/4A
+24V/8A
R894
NA202
R880
202
R881
202
R896
NA202
R906
183
R889
7K5
C850
474/50V
R879
102
C870
102/50V
R875
102
R872
NA
N807
TL431L
VD820
1N4148
VD828
1N4148
VD819
1N4148
R929
100k
XP812
5.1V
R852
101
MMBT2907ALT1G
V815
C876
103/10V
R948
202
R920
513
C879
10uF/16V
V810
MMBT2907ALT1G
R947
103
VD814
1N4148
R864
102
R866
513
R964
102
R867
202
C854
10uF/16V
VD821
1N4148
V811
MMBT2222ALT1G
C845
105/10V
R853
102
R862
102
R871
101
C877
104/50V
V816
MMBT2222ALT1G
R837
102
ON OFF
N806
R838
202